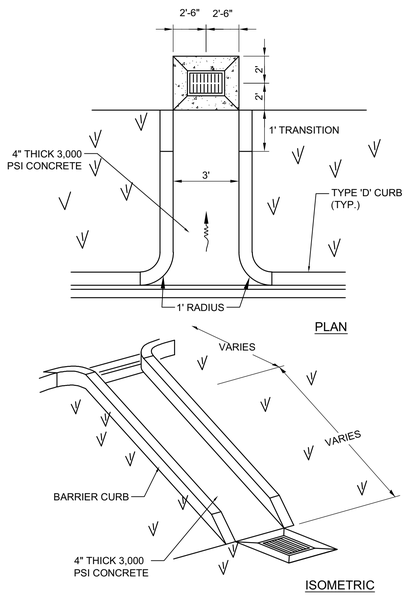


9 CONCRETE FLUME DETAIL

NOT TO SCALE

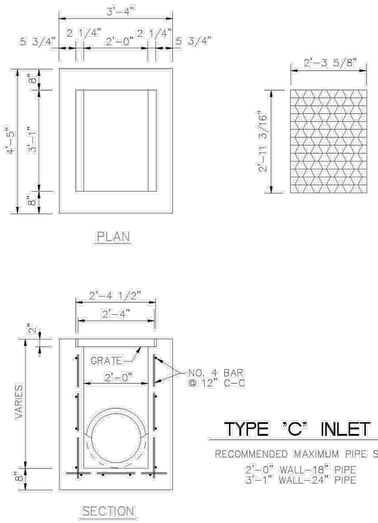


## TYPE "C" INLET

RECOMMENDED MAXIMUM PIPE SIZE
2'-0" WALL-18" PIPE
3'-1" WALL-24" PIPE

ENGINEERING STANDARDS 2022

| REVISIONS BY | DATE | ENGINEERING DIVISION CITY OF POMPANO BEACH | TYPE "C" INLET | DATE: JUNE 2022 DWG. NO. 400-1 |
|---|---|---|---|---|
| S.S. | 09-11 | SCALE: N.T.S. | | |

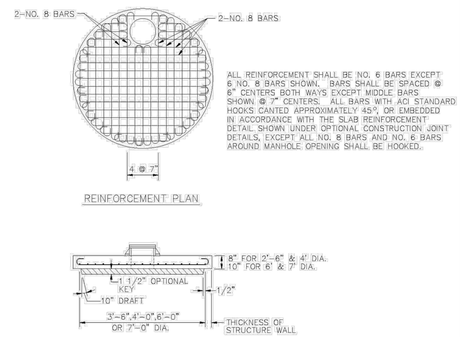


ALL REINFORCEMENT SHALL BE NO. 6 BARS EXCEPT 6 NO. 8 BARS SHOWN. BARS SHALL BE SPACED @ 6" CENTERS BOTH WAYS EXCEPT MIDDLE BARS SHOWN @ 7" CENTERS. ALL BARS WITH ACI STANDARD HOOKS CANTED APPROXIMATELY 45°, OR EMBEDDED IN ACCORDANCE WITH THE SLAB REINFORCEMENT DETAIL SHOWN UNDER OPTIONAL CONSTRUCTION JOINT DETAILS, EXCEPT ALL NO. 8 BARS AND NO. 6 BARS AROUND MANHOLE OPENING SHALL BE HOOKED.

8" FOR 2'-6" & 4' DIA.
10" FOR 6' & 7' DIA.

TYPE 7-T (TRAFFIC H-20)

## STRUCTURE TOP FOR MANHOLE AND JUNCTION BOX

ENGINEERING STANDARDS 2022

| REVISIONS BY | DATE | ENGINEERING DIVISION CITY OF POMPANO BEACH | STRUCTURE TOP ( TYPE 7-T) | DATE: JUNE 2022 DWG. NO. 408-2 |
|---|---|---|---|---|
| | | SCALE: N.T.S. | | |

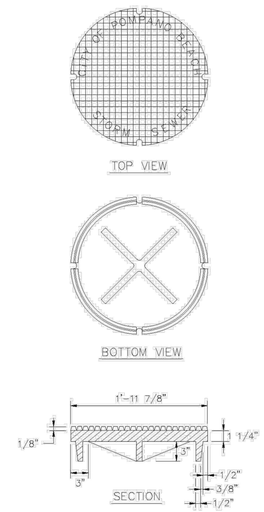


## COVER FOR ALL FRAMES

ENGINEERING STANDARDS 2022

| REVISIONS BY | DATE | ENGINEERING DIVISION CITY OF POMPANO BEACH | COVER FOR MANHOLES AND INLETS | DATE: JUNE 2022 DWG. NO. 409-1 |
|---|---|---|---|---|
| | | SCALE: N.T.S. | | |

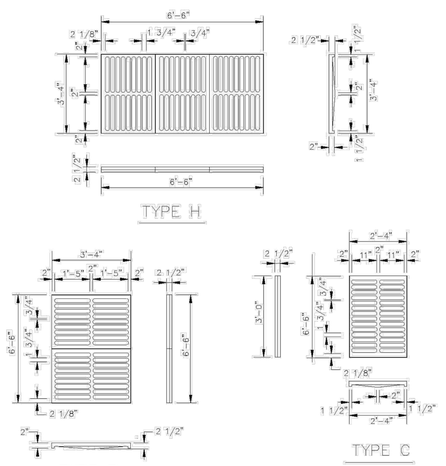


## CAST IRON GRATES

ENGINEERING STANDARDS 2022

| REVISIONS BY | DATE | ENGINEERING DIVISION CITY OF POMPANO BEACH | CAST IRON GRATES | DATE: JUNE 2022 DWG. NO. 410-1 |
|---|---|---|---|---|
| | | SCALE: N.T.S. | | |

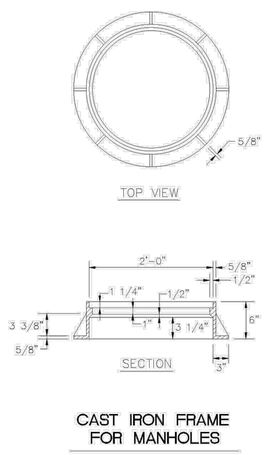


## CAST IRON FRAME FOR MANHOLES

ENGINEERING STANDARDS 2022

| REVISIONS BY | DATE | ENGINEERING DIVISION CITY OF POMPANO BEACH | CAST IRON FRAME FOR MANHOLES | DATE: JUNE 2022 DWG. NO. 411-1 |
|---|---|---|---|---|
| | | SCALE: N.T.S. | | |

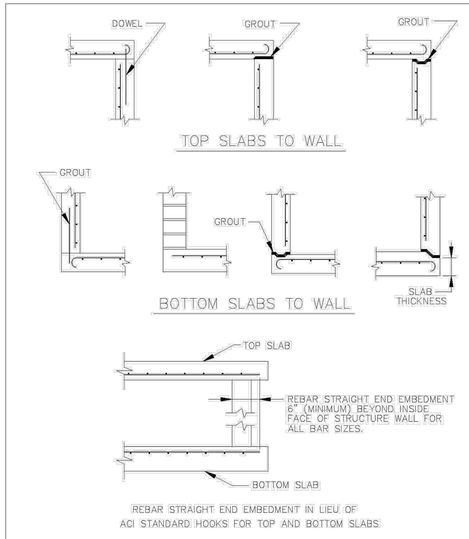


## OPTIONAL CONSTRUCTION JOINTS

ENGINEERING STANDARDS 2022

| REVISIONS BY | DATE | ENGINEERING DIVISION CITY OF POMPANO BEACH | OPTIONAL CONSTRUCTIONAL JOINTS | DATE: JUNE 2022 DWG. NO. 412-1 |
|---|---|---|---|---|
| | | SCALE: N.T.S. | | |

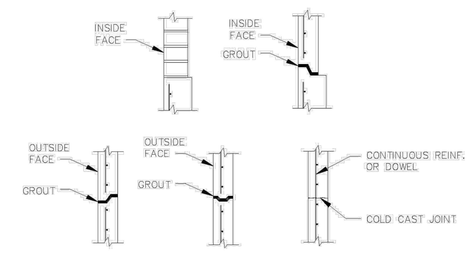


NOTES:

1. ONE OR MORE TYPES OF JOINTS MAY BE USED IN A SINGLE STRUCTURE, EXCEPT BRICK WALL STRUCTURE. BRICK WALL CONSTRUCTION IS PERMITTED ON CIRCULAR UNITS ONLY.
2. ALL GROUTED JOINTS ARE TO HAVE A MAXIMUM THICKNESS OF 1".
3. KEYWAYS ARE TO BE A MINIMUM OF 1 1/2" DEEP.
4. JOINT DOWELS ARE TO BE #4 BARS, 12" LONG WITH A MINIMUM OF 6 BARS PER CIRCULAR STRUCTURES APPROXIMATELY EVENLY SPACED, AND 2 BARS PER SIDE AT APPROXIMATE QUARTER POINTS FOR RECTANGULAR STRUCTURES.
5. MINIMUM COVER ON REINFORCING BARS IS 1 1/4".
6. REBAR STRAIGHT END EMBANKMENT MAY BE USED IN LIEU OF ACI STANDARD HOOKS FOR TOP AND BOTTOM SLABS EXCEPT WHEN HOOKS ARE SPECIFICALLY CALLED FOR IN PLANS OR STANDARD DRAWINGS.
7. JOINTS BETWEEN WALL SEGMENTS AND BETWEEN WALL SEGMENTS AND TOP OR BOTTOM SLABS MAY BE SEALED EITHER BY PREFORMED PLASTIC GASKET MATERIAL OR BY GROUT.
8. APPROVED PRODUCT INSERTS MAY BE USED IN LIEU OF DOWEL EMBEDMENT.

## OPTIONAL CONSTRUCTION JOINTS

ENGINEERING STANDARDS 2022

| REVISIONS BY | DATE | ENGINEERING DIVISION CITY OF POMPANO BEACH | OPTIONAL CONSTRUCTION JOINT | DATE: JUNE 2022 DWG. NO. 412-2 |
|---|---|---|---|---|
| | | SCALE: N.T.S. | | |


KEITH
301 East Atlantic Blvd.
Pompano Beach, FL 33060
PH: (954) 788-3400
Florida Engineering Business License: CA7928
Florida Surveyor and Mapper Business License: LB6860
Florida Landscape Architecture Business License: LC26000457


REVISIONS

| NO. | DESCRIPTION | DATE |
|---|---|---|
| | | |

**PRELIMINARY PLAN NOT FOR CONSTRUCTION**

THESE PLANS ARE NOT FULLY PERMITTED AND ARE SUBJECT TO REVISIONS MADE DURING THE PERMITTING PROCESS.

RESPONSIBILITY FOR THE USE OF THESE PLANS PRIOR TO OBTAINING PERMITS FROM ALL AGENCIES HAVING JURISDICTION OVER THE PROJECT WILL FALL SOLELY UPON THE USER.

| | |
|---|---|
| ISSUE DATE: | 07/14/2022 |
| DESIGNED BY: | JW |
| DRAWN BY: | FA/NW |
| CHECKED BY: | TD |
| BID-CONTRACT: | |

This item has been digitally signed and sealed by Thomas F. Donahue, P.E. on the date below using a Digital Signature.

Printed copies of this document are not considered signed and sealed and the signature must be verified on any electronic copies.

THOMAS F. DONAHUE LICENSE No. 60529 STATE OF FLORIDA PROFESSIONAL ENGINEER

2022.07.13 19:16:13-04'00'
THOMAS F. DONAHUE, P.E.
FLORIDA REG. NO. 60529
(FOR THE FIRM)

CLIENT

**US GATEWAY INVESTMENTS LLC**

PROJECT

**GATEWAY LUXURY APARTMENTS**
**950 N. Powerline Road**
**Pompano Beach, FL**

SHEET TITLE

**PAVING, GRADING, AND DRAINAGE DETAILS**

SHEET NUMBER: CP 502

PROJECT NUMBER: 12697.00

STATUS: PRELIMINARY

DRC
PZ22-12000008
8/17/2022

Plotted by: fascuntar On 7/13/2022 5:05 PM

Drawing name: T:\12697.00 - Powerline Road Pompano Beach - Multi Family Residence - US Gateway Investments\Engineering\Cad\12697.00-CP-5XX.dwg